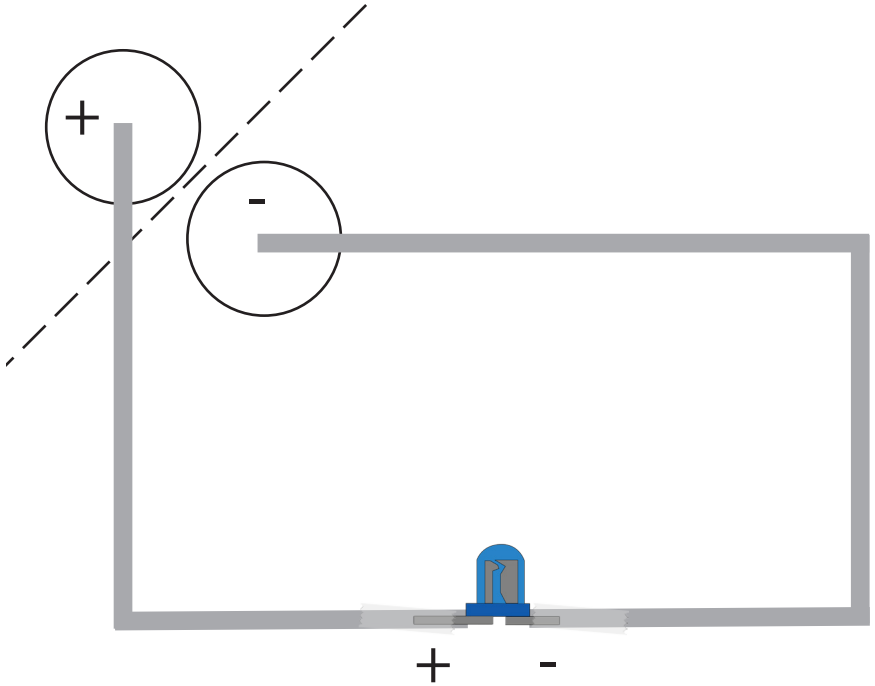
+
-
+
-

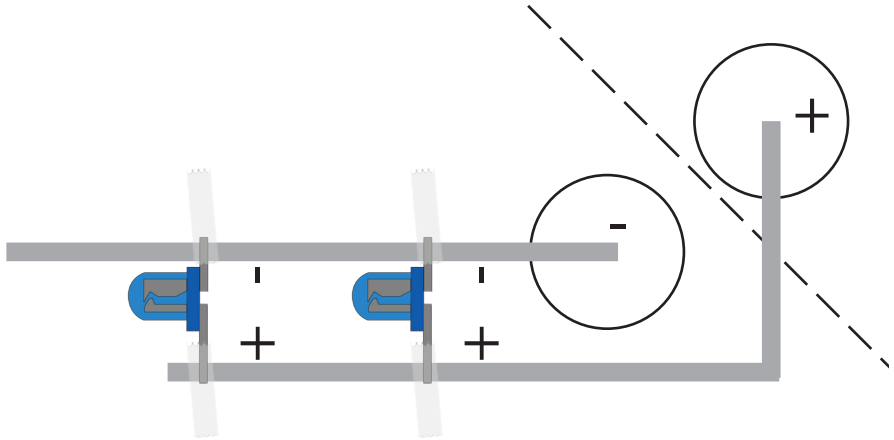
+
-
+
+

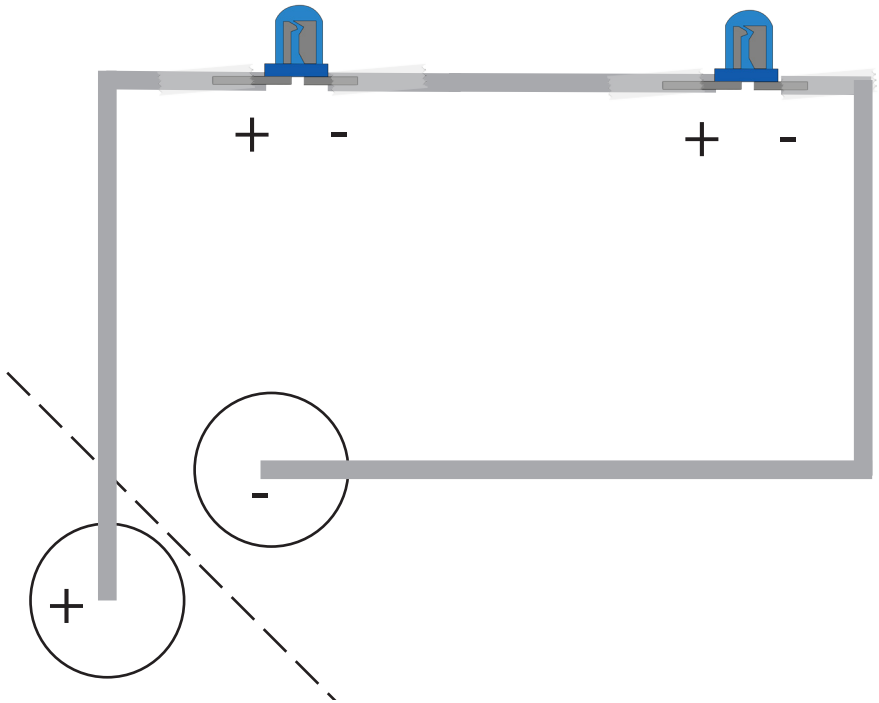
+
-
+
-
-
+

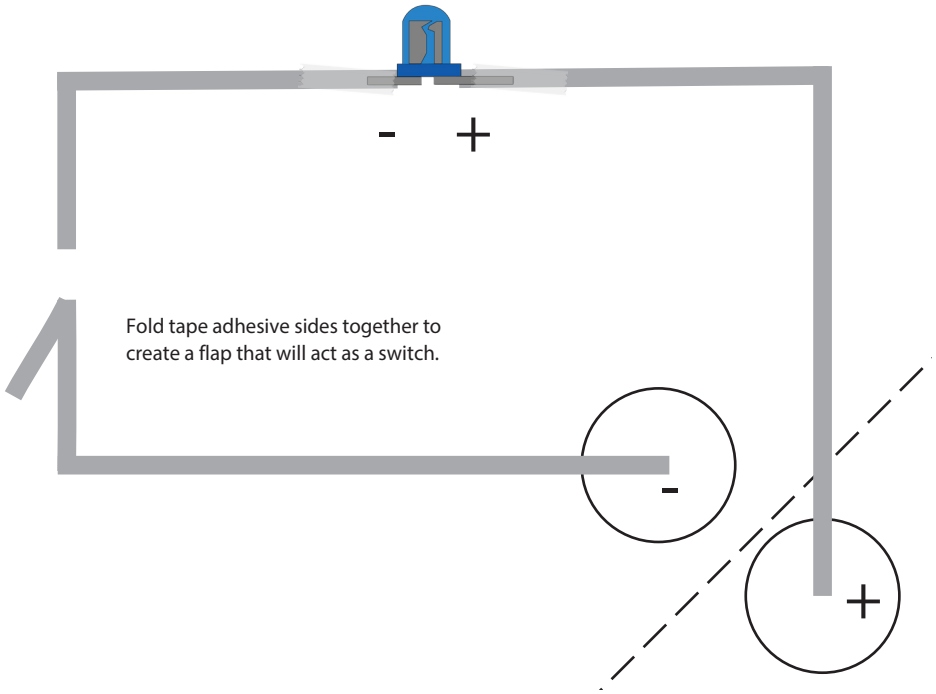
-
+
Fold tape adhesive sides together to
create a flap that will act as a switch.
-
+